Chunghwa Picture Tubes, Ltd.
Technical Specification

To :

Date : 2012/04/06

CPT TFT-LCD

CLAA070NP01 H

ACCEPTED BY :

APPROVED BY	CHECKED BY	PREPARED BY
		Product Planning Management

CHUNGHWA PICTURE TUBES, LTD.

1127 Hopin Rd., Padeh, Taoyuan, Taiwan 334, R.O.C.

TEL: +886-3-3675151 FAX: +886-3-260-7003

Doc. No:	**CLAA070NP01H-SPEC-Ver.1-20120406**	Issue Date:	2012/04/06

1.0 GENERAL DESCRIPTION

1.1 Introduction

CLAA070NP01 is a color active matrix TFT LCD module using amorphous silicon TFT's (Thin Film Transistors) as an active switching devices. This module has a 7.01 inch diagonally measured active area with WSVGA resolutions (1024 horizontal by 600 vertical pixel array). Each pixel is divided into RED, GREEN, BLUE dots which are arranged in vertical Stripe and this module can display 16.7M colors. The TFT-LCD panel used for this module is a low reflection and higher color type.

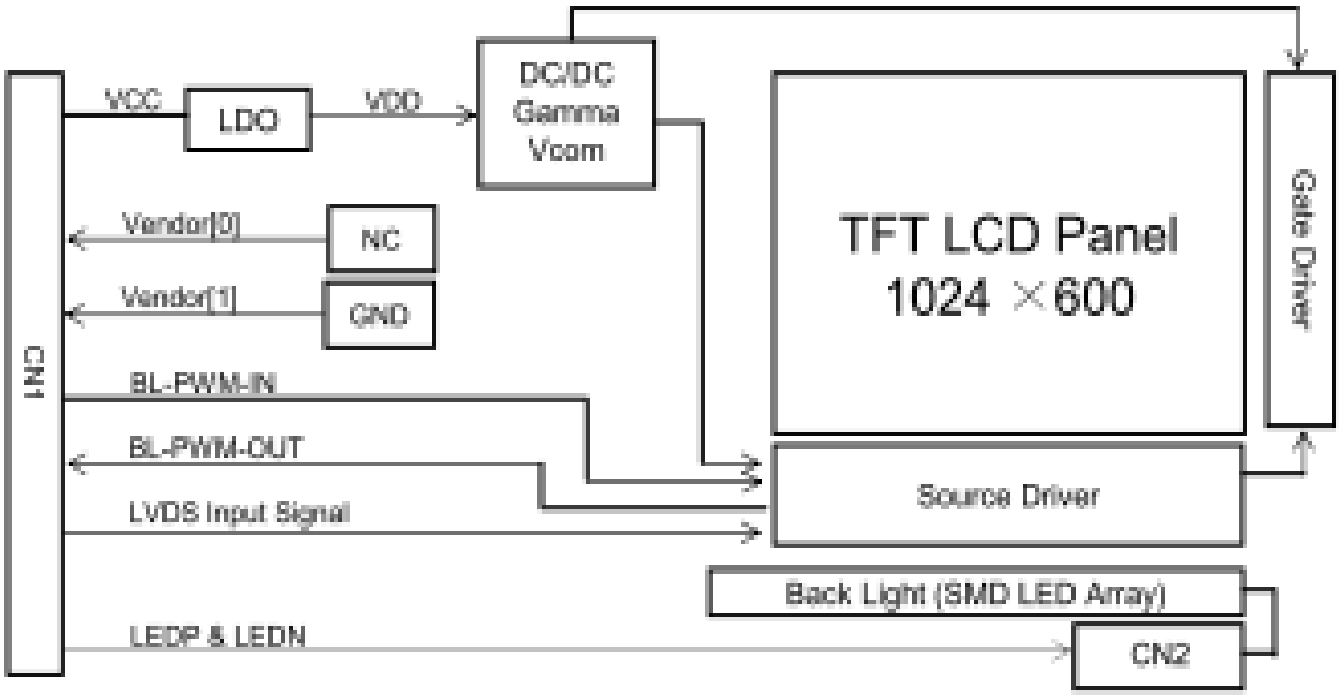

1.2 Features

_ FAB site : CPT Taiwan
_ Thin and Light Weight
_ 3.3 V Logic Power & 16 V Back-light power Supply
_ 1 Channel LVDS Interface
_ SMD LED (20EA) Array (Bottom Side/Horizontal Direction)
_ 16.7M Colors (With Dither & HFRC)
_ Need SPI control (CSB, SCL, SDA) for
_ Green Product (RoHS) & Halogen free

1.3 Application

_ E-book, etc

1.4 General Specifications

< Table 1. General Specifications >

Parameter	Specification	Unit	Remark
Active area	153.6(H) ×90.0(V)	mm	
Number of pixels	1024(H) ×600(V)	pixels	
Pixel pitch	0.15(H) ×0.15(V)	mm	
Pixel arrangement	RGB Vertical Stripe		
Display colors	16.7M	colors	Note 1
Display mode	Normally Black		
Outline dimension	163.6±0.3(H)×102.9±0.3(V)× 2.47±0.2(D)	mm	Note 2
Weight	95 (Max.)	g	
Back-light	Bottom edge side, 20-LEDs type		

Note 1 : Support 16.7M with dither and HFRC

Note 2 : Without component

Horizontal outline dimension is some different to customer request which is 162.8±0.3(H)×102.9±0.3(V)× 2.47±0.2(D)

But outline dimension is confirm value between Hydis and Customer

2.0 ABSOLUTE MAXIMUM RATINGS

The followings are maximum values which, if exceed, may cause faulty operation or damage to the unit.

< Table 2. Absolute Maximum Ratings > Ta=25+/-2°C

Parameter	Symbol	Min.	Max.	Unit	Remarks
Logic Power Supply Voltage	V_{CC}	-0.3	V_{CC}+0.3	V	
Back-light Power Supply Voltage	V_L	-0.3	40	V	
Back-light LED Current	I_L	-	30	mA	Note 1
Back-light LED Reverse Voltage	V_R	-	5	V	
Operating Temperature	T_{OP}	-20	+60	℃	Note 1, Note 2
Storage Temperature	T_{ST}	-40	+70	℃	

Note 1. Ambient temperature vs allowable forward current are shown in the figure below.

Note 2. Temperature and relative humidity range are shown in the figure below.

90% RH Max. (40℃ ≥ Ta)

Maximum wet - bulb temperature at 39℃ or less. (> 40℃) No condensation.

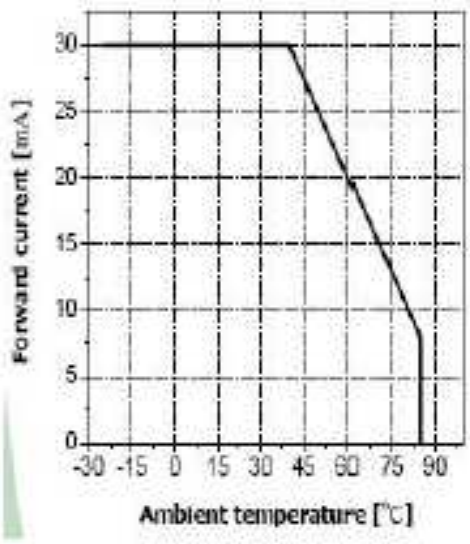

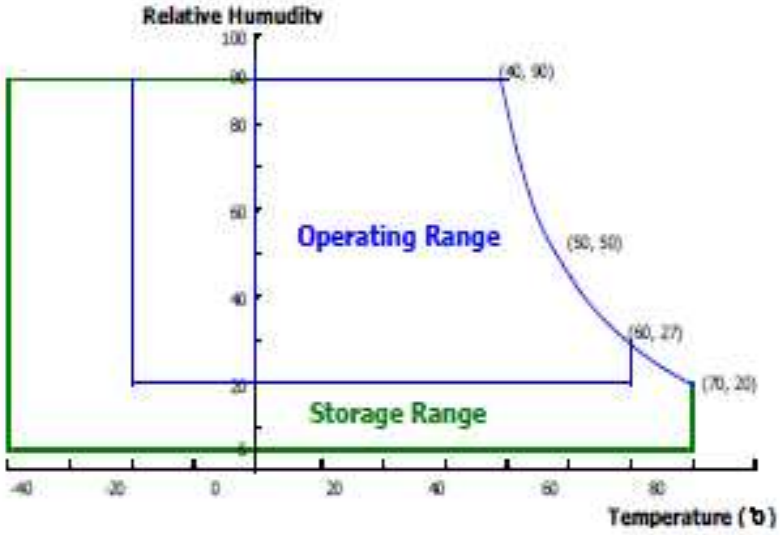

3.0 ELECTRICAL SPECIFICATIONS

3.1 Electrical Specifications

< Table 3. Electrical Specifications >

Parameter		Min.	Typ.	Max.	Unit	Remarks
Logic Power Supply Voltage	V_{CC}	3.0	3.3	3.6	V	Note 1
Logic Power Supply Current	I_{CC}	-	240	290	mA	
Logic Power Consumption	P_C		0.79	0.96	W	
Back-light Power Supply Voltage	V_L	-	16	17	V	Note 2
Back-light Power Supply Current	I_L	-	20	25	mA	
Back-light Power Consumption	P_{BL}	-	1.28	1.36	W	Note 2, 4
High Level Differential Input Signal (V_{CM} = 1.2V)	V_{TH}	-	-	0.1	V	LVDS input
Low Level Differential Input Signal	V_{TL}	- 0.1	-	-	V	
Input voltage range (singled-end)	V_{IN}	0	-	2.4	V	
Differential input voltage	$\lvert V_{ID} \rvert$	0.1	-	0.6	V	
Differential input common mode voltage	V_{CM}	($\lvert V_{ID} \rvert$/2)		2.4-($\lvert V_{ID} \rvert$/2)	V	
Input Current	V_{IN}	-10	-	-10	μA	
Panel unit life time		50,000	-	-	Hrs	Without BL,PCB
Total Power Consumption	P_{total}	-	2.07	2.32	W	Note 1,2,4

Notes :

1. The supply voltage is measured and specified at the interface connector of LCM.
   The logic current draw and power consumption specified is for 3.3V at 25℃.
   a) Typ : Window XP pattern, b) Max : White pattern
2. The supply voltage is measured and specified at the interface connector of LCM.
   The Backlight current draw and power consumption specified is 16V at 25℃.
   The voltage and current value means value for chain.
3. PWM frequency and voltage level is fixed by customer.
4. Backlight power consumption is calculated value for reference (VL× IL × 4 chains).
   About maximum power of backlight is 17V × 20mA × 4 chains = 1.36W

4.0 OPTICAL SPECIFICATIONS

4.1 Overview

The test of optical specifications shall be measured in a dark room (ambient luminance ≤ 1 lux and temperature = 25±2℃) with the equipment of Luminance meter system (Goniometer system and TOPCON BM-5A) and test unit shall be located at an approximate distance 50cm from the LCD surface at a viewing angle of θ and Φ equal to 0°. We refer to $\theta_{Ø=0}$ (=θ3) as the 3 o'clock direction (the "right"), $\theta_{Ø=90}$ (= θ12) as the 12 o'clock direction ("upward"), $\theta_{Ø=180}$ (= θ9) as the 9 o'clock direction ("left") and $\theta_{Ø=270}$(= θ6) as the 6 o'clock direction ("bottom"). While scanning θ and/or Ø, the center of the measuring spot on the Display surface shall stay fixed. V_{CC} shall be 3.3+/- 0.3V at 25℃.

4.2 Optical Specifications

<Table 4. Optical Specifications>

Parameter		Symbol	Condition	Min.	Typ.	Max.	Unit	Remarks
Viewing Angle range	Horizontal	Θ_3	CR > 10	75	89		Deg.	Note 1
		Θ_9		75	89		Deg.	
	Vertical	Θ_{12}		75	89		Deg.	
		Θ_6		75	89		Deg.	
Luminance Contrast ratio		CR	Θ = 0°	640	800	-		Note 2
Luminance of White	1 Points	Y_w	Θ = 0°		30		cd/m²	Note 4
				340	400	-	cd/m²	
White Luminance uniformity	9 Points	ΔY9		72	80	-	%	Note 5
White Chromaticity		W_x	Θ = 0°	0.280	0.301	0.340		Note 3
		W_y		0.310	0.330	0.370		
Reproduction of color	Red	R_x	Θ = 0°	0.563	0.593	0.623		
		R_y		0.323	0.353	0.383		
	Green	G_x		0.283	0.313	0.343		
		G_y		0.559	0.589	0.619		
	Blue	B_x		0.121	0.151	0.181		
		B_y		0.099	0.129	0.159		
Response Time		Total (T_r + T_d)	Ta= 25° C Θ = 0°	-	50	-	ms	Note 6
Cross Talk		CT	Θ = 0°	-	-	2.0	%	Note 7

Notes :

1. Viewing angle is the angle at which the contrast ratio is greater than 10. The viewing angles are determined for the horizontal or 3, 9 o'clock direction and the vertical or 6, 12 o'clock direction with respect to the optical axis which is normal to the LCD surface (see Figure1).
2. Contrast measurements shall be made at viewing angle of Θ= 0 and at the center of the LCD surface. Luminance shall be measured with all pixels in the view field set first to white, then to the dark (black) state (see Figure1). Luminance Contrast Ratio (CR) is defined mathematically as CR = Luminance when displaying a white raster / Luminance when displaying a black raster.
3. Reference only / Standard Front Surface Treatment Measured with green cover glass. The color chromaticity coordinates specified in Table 4 shall be calculated from the spectral data measured with all pixels first in red, green, blue and white. Measurements shall be made at the center of the panel.
4. The luminance value of 400 cd/m2 means the brightness of PWM is 100%. The luminance value of 30 cd/m2 means the brightness of lower PWM. CTF means that measure brightness at only center point at Figure 2.

4.3 Optical Measurements

Figure 1. Measurement Set Up

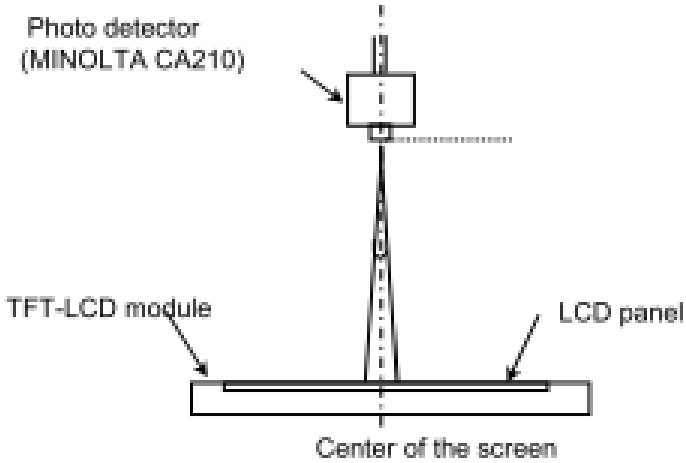

Optical characteristics measurement setup

Figure 2. Uniformity Measurement Locations (9 points)

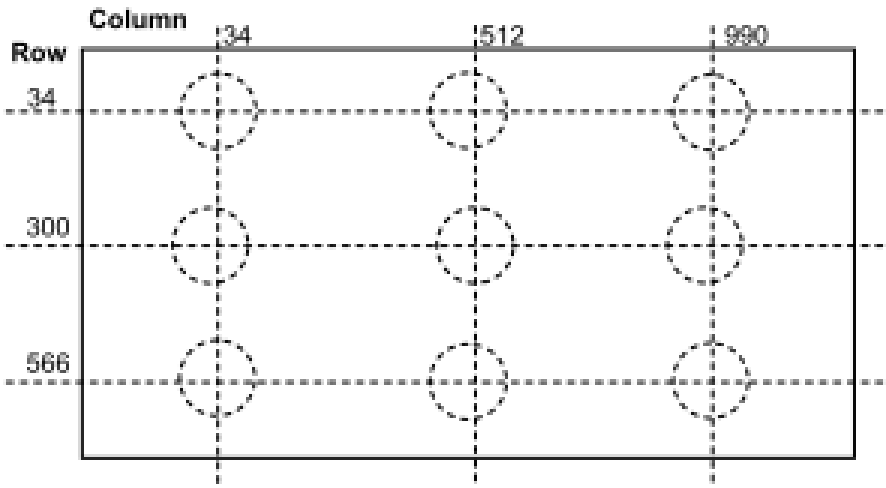

Note 5.

The White luminance uniformity on LCD surface is then expressed as :

ΔY = (Minimum Luminance of 9 points / Maximum Luminance of 9 points) * 100

Refer Figure 2 about measurement points

* LED Condition = (Duty Ratio 100%, LED current 20mA)

Figure 3. Response Time Testing

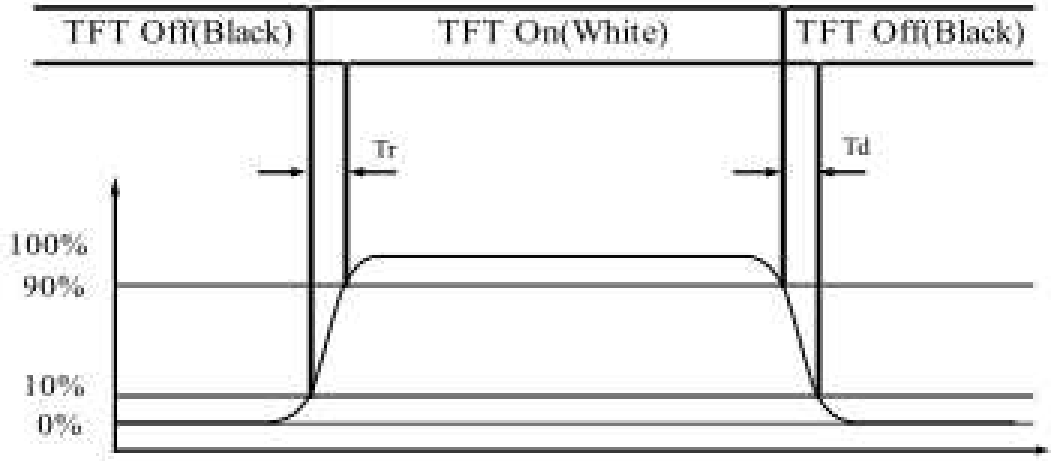

Figure 4. Cross Modulation Test Description

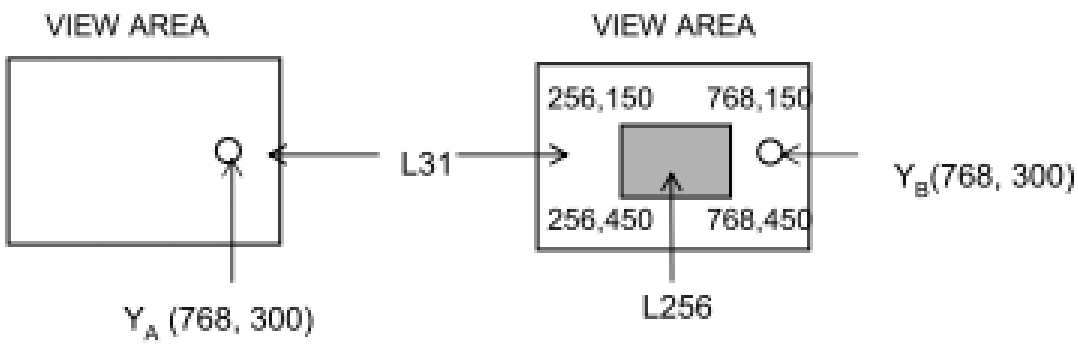

$$\text{Cross-Talk (\%)} = \left| \frac{Y_B - Y_A}{Y_B} \right| \times 100$$

Where:

YA = Initial luminance of measured area (cd/m2)

YB = Subsequent luminance of measured area (cd/m2)

The location measured will be exactly the same in both patterns

Note 6.

The electro-optical response time measurements shall be made as Figure 3 by switching the “data” input signal ON and OFF. The times needed for the luminance to change from 10% to 90% is Tr, and 90% to 10% is Td.

Note 7.

Cross-Talk of one area of the LCD surface by another shall be measured by comparing the luminance (YA) of a 25mm diameter area, with all display pixels set to a gray level, to the luminance(YB) of that same area when any adjacent area is driven dark (Refer to Figure 4).

5.0 INTERFACE CONNECTIONS

5.1 Electrical Interface Connection

CN1 Interface Connector (AA01B-P030VA1, Manufactured by JAE)

<Table 5, Electrical Interface Connection >

Pin No.	Symbol	Function	Pin No.	Symbol	Function
1	VCC	+3.3V Power Supply	16	D1-IN-N	LDVS differential data input
2	GND	Ground	17	Vendor[1]	Vendor distinguish pin 2
3	VCC	+3.3V Power Supply	18	D1-IN-P	LDVS differential data input
4	CLK-IN-N	LVDS Clock input (Negative)	19	CSB	Serial Communication Chip Select
5	VCC	+3.3V Power Supply	20	GND	Ground
6	CLK-IN-P	LVDS Clock input (Positive)	21	SCL	Serial Communication Clock Input
7	GND	Ground	22	D2-IN-N	LDVS differential data input
8	GND	Ground	23	SDA	Serial Communication Data Input
9	LEDP	Power supply for LED [Anode]	24	D2-IN-P	LDVS differential data input
10	D0-IN-N	LDVS differential data input	25	GND	Ground
11	LEDN	Power supply for LED [Cathode]	26	GND	Ground
12	D0-IN-P	LDVS differential data input	27	BL-PWM-IN	Brightness Control Signal
13	GND	Ground	28	D3-IN-N	LDVS differential data input
14	GND	Ground	29	BL-PWM-OUT	Backlight Dimmer Signal
15	Vendor[0]	Vendor distinguish pin 1	30	D3-IN-P	LDVS differential data input

5.2 LVDS Interface

LVDS Transmitter : THC63LVDM83A

<Table 6, LVDS Interface >

Input signal	Transmitter		Interface		AA01B-P030VA1	Remark
	Pin No	Pin No	System (Tx)	TFT-LCD (Rx)	Pin No.	
R0	51	48 47	OUT0- OUT0+	D0-IN-N D0-IN-P	10 12	
R1	52					
R2	54					
R3	55					
R4	56					
R5	3					
G0	4					
G1	6	46 45	OUT1- OUT1+	D1-IN-N D1-IN-P	16 18	
G2	7					
G3	11					
G4	12					
G5	14					
B0	15					
B1	19					
B2	20	42 41	OUT2- OUT2+	D2-IN-N D2-IN-P	22 24	
B3	22					
B4	23					
B5	24					
HSYNC	27					
VSYNC	28					
DE	30					
R6	50	38 37	OUT3- OUT3+	D3-IN-N D3-IN-P	28 30	
R7	2					
G6	8					
G7	10					
B6	16					
B7	18					
Reserved	25					
MCLK	31	40	CLKOUT-	CLK-IN-N	4	
		39	CLKOUT+	CLK-IN-P	6	

5.3 Back-light Interface

CN2 LED FPC Connector (solder type)

<Table 7, LED FPC connection >

Pin No.	Symbol	Function	Remark
1	Anode1	LED Anode Power Supply	Typ. 16V
2			
3	Cathode1	LED Cathode Power Supply	
4		LED Cathode Power Supply	

5.4 Data Input Format

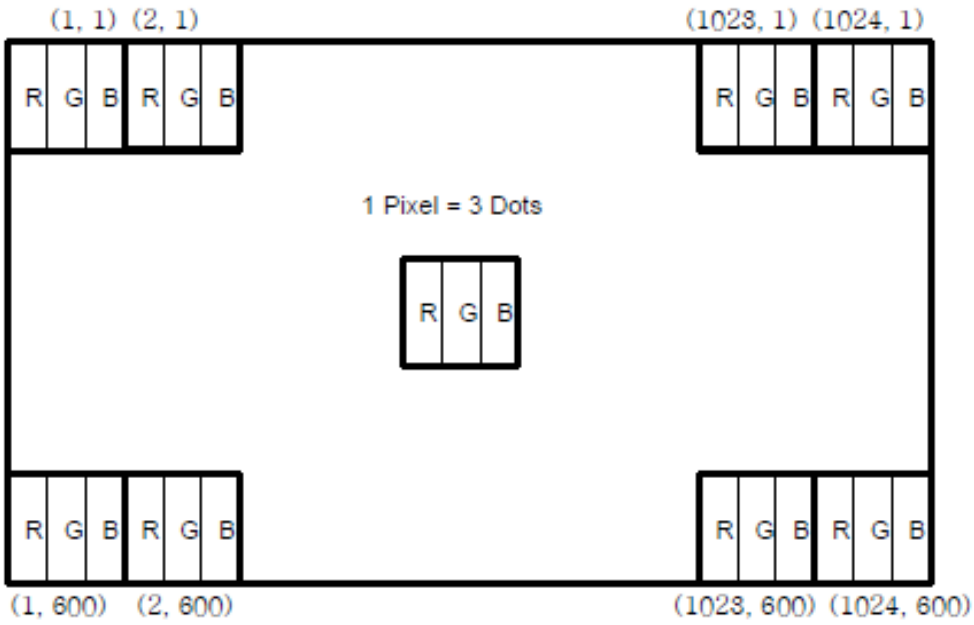

6.0. SIGNAL TIMING SPECIFICATIONS

6.1 Timing specification at HV Mode (LVDS Transmitter Input)

<Table 8, Signal Timing >

Item	Symbol	Min.	Typ.	Max.	Unit
Frame Rate	-	40	60	73	Hz
Frame Period	T1	624	635	750	Lines
Vertical Display Time	T2	-	600	-	Lines
Vertical Blanking Time	T3	-	35	-	Lines
1 Line Scanning Time	T4	1200	1344	1400	Clocks
Horizontal Display Time	T5	-	1024	-	Clocks
Horizontal Blanking Time	T6	-	320	-	Clocks
Clock Rate	1/T7	40.8	51.2	63	MHz

7.0 SIGNAL TIMING WAVEFORMS

7.1 Vertical Input Timing Waveforms of Interface Signal

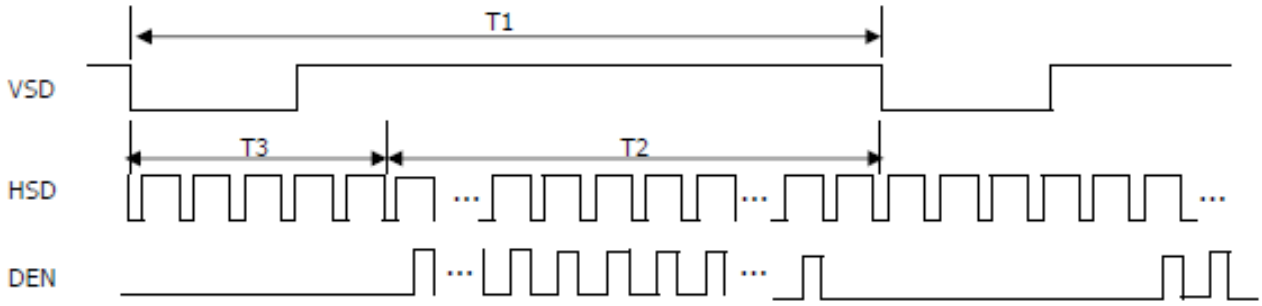

7.2 Horizontal Input Timing Waveforms of Interface Signal

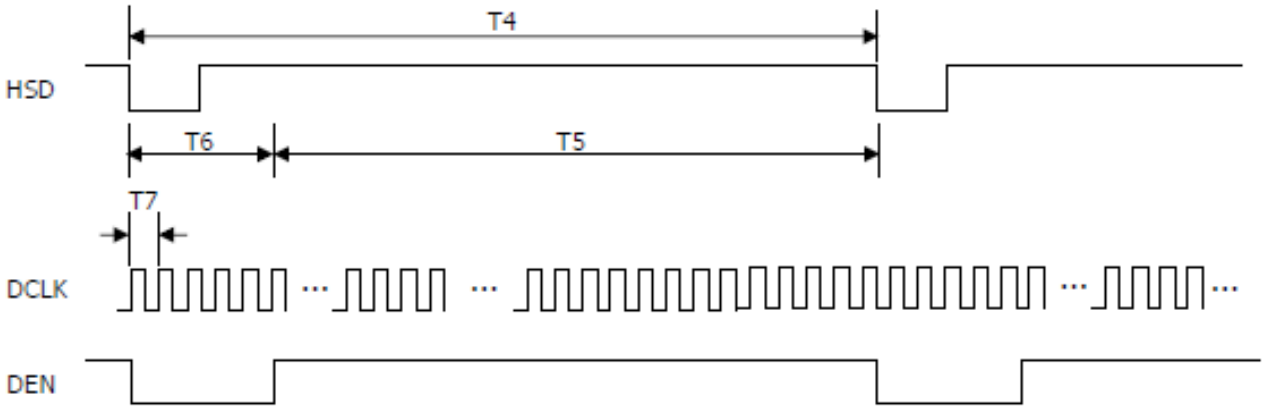

7.3 LVDS Rx Interface Timing Parameter

The specification of the LVDS Rx interface timing parameter

< Table 9, LVDS Rx Interface Timing Specification>

Item	Symbol	Min.	Typ.	Max.	Unit	Remarks
CLKIN Period	tRCIP	-	19.53	-	nsec	
Input Data 0	tRIP0	-0.4	0.0	+0.4	nsec	
Input Data 1	tRIP1	tRICP/7-0.4	tRICP/7	tRICP/7+0.4	nsec	
Input Data 2	tRIP2	2 × tRICP/7-0.4	2 × tRICP/7	2 × tRICP/7+0.4	nsec	
Input Data 3	tRIP3	3 × tRICP/7-0.4	3 × tRICP/7	3 × tRICP/7+0.4	nsec	
Input Data 4	tRIP4	4 × tRICP/7-0.4	4 × tRICP/7	4 × tRICP/7+0.4	nsec	
Input Data 5	tRIP5	5 × tRICP/7-0.4	5 × tRICP/7	5 × tRICP/7+0.4	nsec	
Input Data 6	tRIP6	6 × tRICP/7-0.4	6 × tRICP/7	6 × tRICP/7+0.4	nsec	

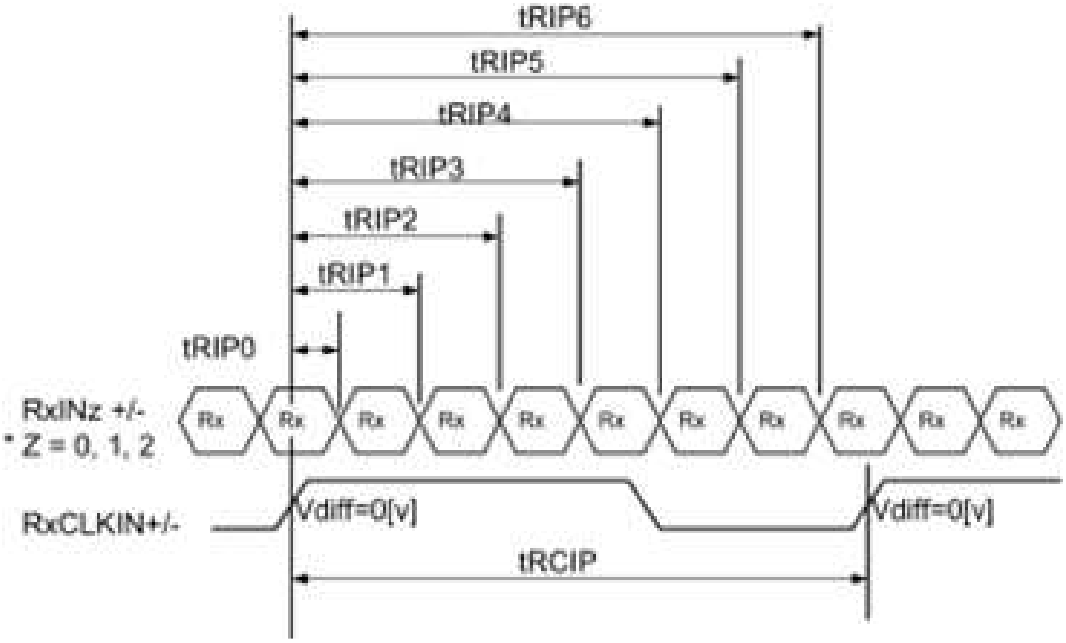

8.0 INPUT SIGNALS, BASIC DISPLAY COLORS & GRAY SCALE OF COLORS

A total of 16.7M colors are displayed with dither & HFRC using 64 gray from 8bit input.

Colors & Gray Scale		Data signal																							
		Red data								Green data								Blue data							
		R0	R1	R2	R3	R4	R5	R6	R7	G0	G1	G2	G3	G4	G5	G6	G7	B0	B1	B2	B3	B4	B5	B6	B7
Basic Colors	Black	0	0	0	0	0	0	0	0	0	0	0	0	0	0	0	0	0	0	0	0	0	0	0	0
	Blue	0	0	0	0	0	0	0	0	0	0	0	0	0	0	0	0	1	1	1	1	1	1	1	1
	Green	0	0	0	0	0	0	0	0	1	1	1	1	1	1	1	1	0	0	0	0	0	0	0	0
	Light Blue	0	0	0	0	0	0	0	0	1	1	1	1	1	1	1	1	1	1	1	1	1	1	1	1
	Red	1	1	1	1	1	1	1	1	0	0	0	0	0	0	0	0	0	0	0	0	0	0	0	0
	Purple	1	1	1	1	1	1	1	1	0	0	0	0	0	0	0	0	1	1	1	1	1	1	1	1
	Yellow	1	1	1	1	1	1	1	1	1	1	1	1	1	1	1	1	0	0	0	0	0	0	0	0
	White	1	1	1	1	1	1	1	1	1	1	1	1	1	1	1	1	1	1	1	1	1	1	1	1
Gray Scale of Red	Black	0	0	0	0	0	0	0	0	0	0	0	0	0	0	0	0	0	0	0	0	0	0	0	0
	△	1	0	0	0	0	0	0	0	0	0	0	0	0	0	0	0	0	0	0	0	0	0	0	0
	Darker	0	1	0	0	0	0	0	0	0	0	0	0	0	0	0	0	0	0	0	0	0	0	0	0
	△	↓								↓								↓							
	▽	↓								↓								↓							
	Brighter	1	0	1	1	1	1	1	1	0	0	0	0	0	0	0	0	0	0	0	0	0	0	0	0
	▽	↓								0	0	0	0	0	0	0	0	0	0	0	0	0	0	0	0
	Red	1	1	1	1	1	1	1	1	0	0	0	0	0	0	0	0	0	0	0	0	0	0	0	0
Gray Scale of Green	Black	0	0	0	0	0	0	0	0	0	0	0	0	0	0	0	0	0	0	0	0	0	0	0	0
	△	0	0	0	0	0	0	0	0	1	0	0	0	0	0	0	0	0	0	0	0	0	0	0	0
	Darker	0	0	0	0	0	0	0	0	0	1	0	0	0	0	0	0	0	0	0	0	0	0	0	0
	△	↓								↓								↓							
	▽	↓								↓								↓							
	Brighter	0	0	0	0	0	0	0	0	1	0	1	1	1	1	1	1	0	0	0	0	0	0	0	0
	▽	0	0	0	0	0	0	0	0	↓								0	0	0	0	0	0	0	0
	Green	0	0	0	0	0	0	0	0	1	1	1	1	1	1	1	1	0	0	0	0	0	0	0	0
Gray Scale of Blue	Black	0	0	0	0	0	0	0	0	0	0	0	0	0	0	0	0	0	0	0	0	0	0	0	0
	△	0	0	0	0	0	0	0	0	0	0	0	0	0	0	0	0	1	0	0	0	0	0	0	0
	Darker	0	0	0	0	0	0	0	0	0	0	0	0	0	0	0	0	0	1	0	0	0	0	0	0
	△	↓								↓								↓							
	▽	↓								↓								↓							
	Brighter	0	0	0	0	0	0	0	0	0	0	0	0	0	0	0	0	1	0	1	1	1	1	1	1
	▽	0	0	0	0	0	0	0	0	0	0	0	0	0	0	0	0	↓							
	Blue	0	0	0	0	0	0	0	0	0	0	0	0	0	0	0	0	1	1	1	1	1	1	1	1
Gray Scale of White & Black	Black	0	0	0	0	0	0	0	0	0	0	0	0	0	0	0	0	0	0	0	0	0	0	0	0
	△	1	0	0	0	0	0	0	0	1	0	0	0	0	0	0	0	1	0	0	0	0	0	0	0
	Darker	0	1	0	0	0	0	0	0	0	1	0	0	0	0	0	0	0	1	0	0	0	0	0	0
	△	↓								↓								↓							
	▽	↓								↓								↓							
	Brighter	1	0	1	1	1	1	1	1	1	0	1	1	1	1	1	1	1	0	1	1	1	1	1	1
	▽	↓								↓								↓							
	White	1	1	1	1	1	1	1	1	1	1	1	1	1	1	1	1	1	1	1	1	1	1	1	1

9.0 3-WIRE SERIAL PORT INTERFACE (SPI INTERFACE)

This module use 3-wire serial port interface as function configuration and parameter setting

9.1 3-Wire command format

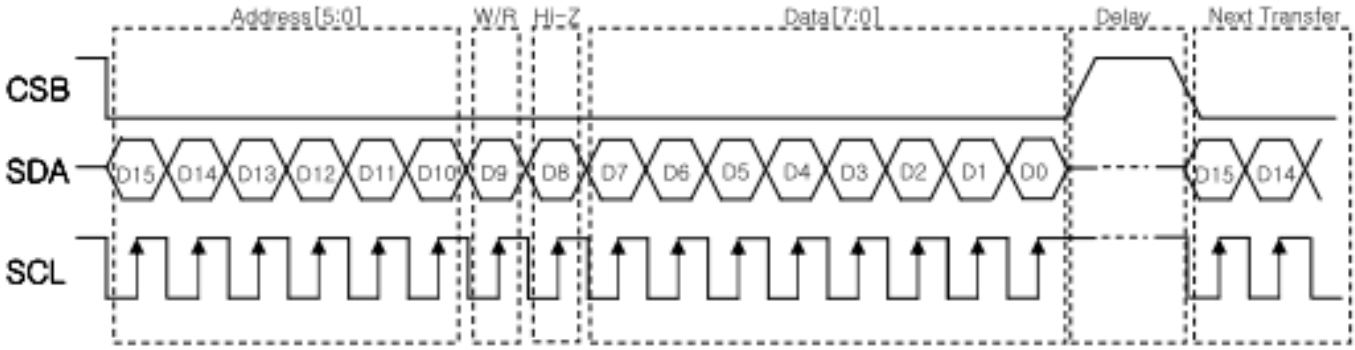

Bit	Description
D15-D10	Register Address [5:0]
D9	W/R control bit. "0" for Write; "1" for Read
D9	Hi-z bit during read mode. Any data within this bits will be ignored during write Mode
D7-D0	Data for the W/R operation to the address indicated by Address phase

9.2 3-Wire Write format

MSB															LSB
D15	D14	D13	D12	D11	D10	D9	D8	D7	D6	D5	D4	D3	D2	D1	D1
Register Address [5:0]						0	X	Data (Issued by external controller)							

9.3 3-Wire Read format

MSB															LSB
D15	D14	D13	D12	D11	D10	D9	D8	D7	D6	D5	D4	D3	D2	D1	D1
Register Address [5:0]						1	Hi-Z	Data (Issued by 3-wire engine)							

9.4 3-wire control register

9.4.1 R00 : System Control Register

Designation	Address	Description
MODE	R0[0]	DE/SYNC mode select. MODE = "0", HSD/VSD mode. MODE = "1", DE mode. (Default)
DCKPOL	R0[1]	DCLK polarity control bit DCLKPOL = "0" : Data sampling at DCLK falling edge. (Default) DCLKPOL = "1" : Data sampling at DCLK rising edge.
GRB	R0[2]	Global reset bit. GRB="0", The controller is in reset state. GRB="1", Normal operation. (Default)
STBYB	R0[3]	Standby mode selection bit. STBYB = "0", Timing control, driver and DC-DC converter, are off, and all outputs are High-Z. STBYB = "1", Normal operation. (Default)
UPDN	R0[4]	Gate Up or Down scan control. UPDN = "0", STV2 output vertical start pulse and UD pin output Logical "0" to Gate driver. (Default) UPDN = "1", STV1 output vertical start pulse and UD pin output Logical "1" to Gate driver. (Default)
SHLR	R0[5]	Right/Left sequence control of source driver. SHLR = "0", Shift left : Last data = S1<-S2<-S3…<-S960 = First Data SHLR = "1", Shift left : Last data = S1->S2->S3…->S960 = Last Data (Default)
-	R0[6]	Reserved
PWR_EN	R0[7]	POWER enable. PWR_EN = H, enable PWM, Charge pump and VCOM buffer.

9.4.2 R01 : System Control Register

Designation	Address	Description
	R1[0]	Reserved
RES[1:0]	R1[2:1]	Display resolution selection. RES[1:0] = "01", for 1024(RGB)*768 display resolution. (dual or cascade) RES[1:0] = "00", for 1024(RGB)*600 display resolution. (dual or cascade) (Default) RES[1:0] = "10", for 800(RGB)*600 display resolution. (dual or cascade) RES[1:0] = "11", for 800(RGB)*480 display resolution. (dual or cascade) (601~936 channel disable)
BIST	R1[3]	Normal Operation / BIST pattern select. BIST = H : BIST (DCLK input is not needed) BIST = L : Normal Operation (Default)
DITHER	R1[4]	Dithering function enable control. DITHER = "1", Enable internal dithering function. DITHER = "0", Disable internal dithering function. (Default)
HFRC	R1[5]	H-FRC selection HFRC = H : H-FRC enable HFRC = L : H-FRC disable (Default) If DITHER = H and HFRC = L : enable only FRC/dithering function If DITHER = L, disable dithering function (H-FRC and FRC both disable)
CABC_EN[1:0]	R1[7:6]	CABC H/W enable pin. Normally pull low. When CABC_EN = "00", CABC OFF. (Default mode) When CABC_EN = "01", User interface Image. When CABC_EN = "10", Still Picture. When CABC_EN = "11", Moving Image.

9.4.3 R02 : System Control Register

Designation	Address	Description
	R2[5:0]	Reserved
NBW	R2[6]	Normally black or normally white setting. NBW = H : Normally black NBW = L : Normally white (Default)
BIST	R2[7]	Reserved

9.4.4 R03 : Gate on sequence controller register

<table>
<tr><th>Designation</th><th>Address</th><th>Description</th></tr>
<tr><td>SEL[1:0]</td><td>R3[1:0]</td><td>Gate on sequence select
<table>
<tr><th>SEL[0]</th><th>SEL[1]</th><th>Pin control function</th></tr>
<tr><td>1</td><td>1</td><td> 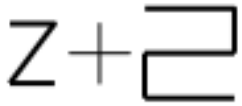 </td></tr>
<tr><td>1</td><td>0</td><td>  </td></tr>
<tr><td>0</td><td>1</td><td></td></tr>
<tr><td>0</td><td>0</td><td>Z (Default)</td></tr>
</table></td></tr>
<tr><td>Frame</td><td>R3[2]</td><td>Frame inverse or not select.
FRAME = “1”, Uniform
FRAME = “0”, Frame inverse (Default)</td></tr>
<tr><td>-</td><td>R3[7:3]</td><td>Reserved</td></tr>
</table>

9.4.5 R0E : test mode (1)

Designation	Address	Description
TEST_mode(1)	R0E[7:0]	Enter test mode (1) TEST_mode = 8’h5F, enter TEST_mode = other exit (Default)

9.4.6 R0F : test mode (2)

Designation	Address	Description
TEST_mode(2)	R0F[7:0]	Enter test mode (2) TEST_mode = 8’hA4, enter TEST_mode = other exit (Default)

9.4.7 R0D : charging time control (3)

Designation	Address	Description
OE_WIDTH	R0D[7:0]	Inversion type select. Enter Test mode (1) and (2) first. Then R0D setting will be active TEST_mode = 8'h00, increase charge time

9.4.8 R02 : charge sharing control

Designation	Address	Description
EQC_ADJ	R02[7:0]	Inversion type select. Enter Test mode (1) and (2) first. Then R10 setting will be active EQC_ADJ = 8'h43, adjust charge sharing time

9.4.9 R0A : BIAS current control (5)

Designation	Address	Description
BIAS_TRIG	R0A[7:0]	Inversion type select. Enter Test mode (1) and (2) first. Then R10 setting will be active BIAS_TRIG = 8'h28, trigger bias reduction

9.4.10 R10 : inversion architecture

Designation	Address	Description
INV	R10F[7:0]	Inversion type select. Enter Test mode (1) and (2) first. Then R10 setting will be active 2line / 1dot = 8'h41 1line / 1dot = 8'h01 (Default)

9.4.11 R38 : PWM_DIV setting

<table>
<tr><th>Designation</th><th>Address</th><th>Description</th></tr>
<tr><td>PWM_DIV[3:0]</td><td>R38[7:0]</td><td>
PWM Dimmer frequency step setting
<table>
<tr><th>R38[7:0]</th><th>PWM_DIV[3:0]</th><th>Register function</th></tr>
<tr><td>0x0C</td><td>000</td><td>Don't use.</td></tr>
<tr><td>0x1C</td><td>001</td><td>1</td></tr>
<tr><td>0x2C</td><td>010</td><td>2</td></tr>
<tr><td>0x3C</td><td>011</td><td>3</td></tr>
<tr><td>0x4C</td><td>100</td><td>4</td></tr>
<tr><td>0x5C</td><td>101</td><td>5</td></tr>
<tr><td>0x6C</td><td>110</td><td>6</td></tr>
<tr><td>0x7C</td><td>111</td><td>7 (Default)</td></tr>
</table>
<table>
<tr><th>PWM Reference Frequency (FOSC)</th><th>Real PWM Frequency of DIMO</th></tr>
<tr><td>51.2MHz (Typical)</td><td>$\text{PWM Frequency} = \frac{\text{FOSC}}{256 \times 128 \times \text{PWM\_DIV[2:0]}}$</td></tr>
</table>
In order in maintain the dimming frequency for brightness control at different display resolution (typical 1024 x 600) at normal mode. We will change default value of PWM_DIV to follow as table
<table>
<tr><th>Display Resolution</th><th>Default value of PWM_DIV</th></tr>
<tr><td>RES[1:0] = "00"</td><td>111</td></tr>
<tr><td>RES[1:0] = "01"</td><td>111</td></tr>
<tr><td>RES[1:0] = "10"</td><td>110</td></tr>
<tr><td>RES[1:0] = "11"</td><td>100</td></tr>
</table>
</td></tr>
</table>

Note : The R6 and R38 register will be available when the R0E and R0F register already had issued.

9.5 Recommend Register Setting (CABC Off mode)

Register write sequence : R00 (Reset) -> R00 (Into Standby mode) -> R01 (Enable FRC / Dither, CABC off) -> R02 (Enable Normally Black) -> R0E (Enter Test mode (1)) -> R0F (Enter Test mode (2)) -> R0D (SDRRS on) -> R00 (Release standby mode)

If you don't use register write sequence, it may cause faulty operation.

	D15	D14	D13	D12	D11	D10	D9	D8	D7	D6	D5	D4	D3	D2	D1	D0	Setting
R00	0	0	0	0	0	0	0	0	0	0	1	0	1	0	0	1	0x0029
R00	0	0	0	0	0	0	0	0	0	0	1	0	0	1	0	1	0x0025
R01	0	0	0	0	0	1	0	0	0	0	1	1	0	0	0	0	0x0430
R02	0	0	0	0	1	0	0	0	0	1	0	0	0	0	0	0	0x0840
R0E	0	0	1	1	1	0	0	0	0	1	0	1	1	1	1	1	0x385F
R0F	0	0	1	1	1	1	0	0	1	0	1	0	0	1	0	0	0x3CA4
R0D	0	0	1	1	0	1	0	0	0	0	0	0	0	0	0	1	0x3401
R00	0	0	0	0	0	0	0	0	0	0	1	0	1	1	0	1	0x002D

9.6 Recommend Register Setting (CABC on mode (Moving Picture)

Register write sequence : R00 (Reset) -> R00 (Into Standby mode) -> R01 (Enable FRC / Dither, CABC on) -> R02 (Enable Normally Black) -> R0E (Enter Test mode (1)) -> R0F (Enter Test mode (2)) -> R0D (SDRRS on) -> R38 (PWM Frequency = 1.5KHz) -> R00 (Release standby mode)

If you don't use register write sequence, it may cause faulty operation.

	D15	D14	D13	D12	D11	D10	D9	D8	D7	D6	D5	D4	D3	D2	D1	D0	Setting
R00	0	0	0	0	0	0	0	0	0	0	1	0	1	0	0	1	0x0029
R00	0	0	0	0	0	0	0	0	0	0	1	0	0	1	0	1	0x0025
R01	0	0	0	0	0	1	0	0	0	0	1	1	0	0	0	0	0x04F0
R02	0	0	0	0	1	0	0	0	0	1	0	0	0	0	0	0	0x0840
R0E	0	0	1	1	1	0	0	0	0	1	0	1	1	1	1	1	0x385F
R0F	0	0	1	1	1	1	0	0	1	0	1	0	0	1	0	0	0x3CA4
R0D	0	0	1	1	0	1	0	0	0	0	0	0	0	0	0	1	0x3401
R38	1	1	1	0	0	0	0	0	0	0	0	1	1	1	0	0	0xE01C
R00	0	0	0	0	0	0	0	0	0	0	1	0	1	1	0	1	0x002D

10.0 POWER SEQUENCE

To prevent a latch-up or DC operation of the LCD module, the power on/off sequence shall be as shown in below

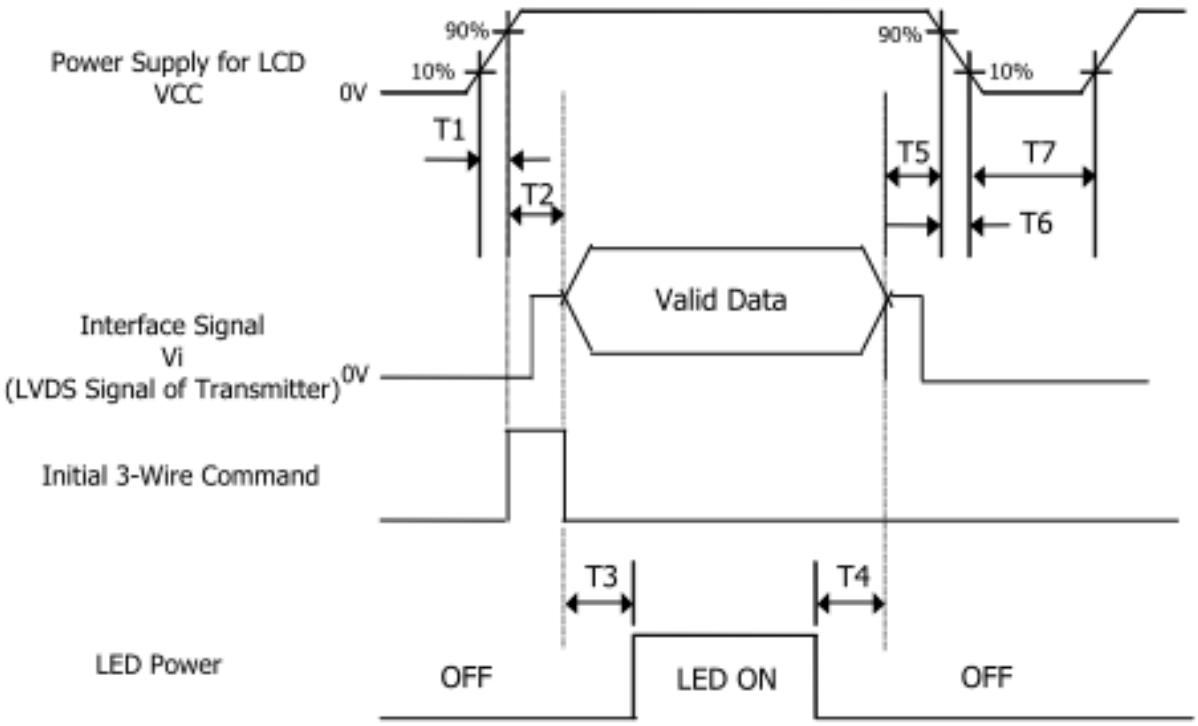

Parameter	Value			Unit	Remark
	Min.	Typ.	Max.		
T1	0.5		10	ms	
T2	0		16	ms	
T3	200			ms	
T4	200			ms	
T5	0			ms	
T6	3			ms	
T7	400			ms	

Notes :

1. When the power supply VDD is 0V, Keep the level of input signals on the low or keep high impedance.
2. Do not keep the interface signal high impedance when power is on.
3. Back Light must be turn on after power for logic and interface signal are valid.

11.0 MECHANICAL CHARACTERISTICS

11.1 Dimensional Requirements

Figure 5 & 6 (located in 12.0) shows mechanical outlines for the model

<Table9, Mechanical Characters >

Parameter	Specification	Unit
Active Area	153.60(H) X 90.00(V)	mm
Number of pixels	1024(H) X 600(V) (1 pixel = R + G + B dots)	
Pixel pitch	0.15(H) X 0.15(V)	
Pixel arrangement	RGB Vertical stripe	
Display colors	16.7M	
Display mode	Normally Black	
Outline dimension	163.6±0.3(H)×102.9±0.3(V)× 2.47±0.2(D)	mm
Weight	95 (Max.)	g
Back-light	Edge side 20-LEDs type (5 X 4 Array)	

11.2 Polarizer Hardness.

The surface of the LCD has an coating to reduce scratching.

11.3 Light Leakage

There shall not be visible light from the back-lighting system around the edges of the screen as seen from a distance 50cm from the screen with an overhead light level of 150lux. The manufacture shall furnish limit samples of the panel showing the light leakage acceptable.

12.0 MECHANICAL DRAWING

Figure 5. TFT-LCD Module Outline Dimension (Front View)

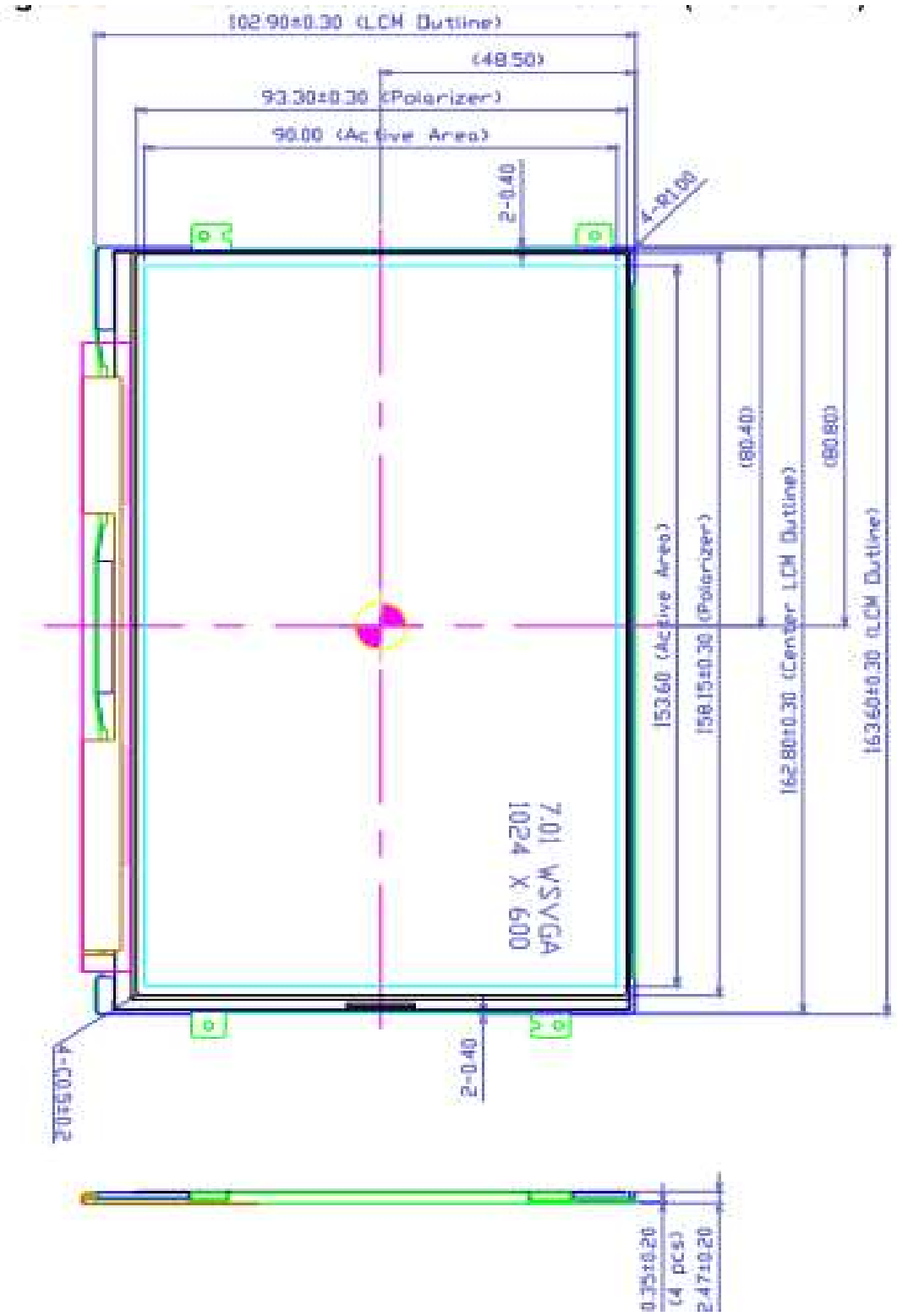

Figure 6. TFT-LCD Module Outline Dimensions (Rear view)

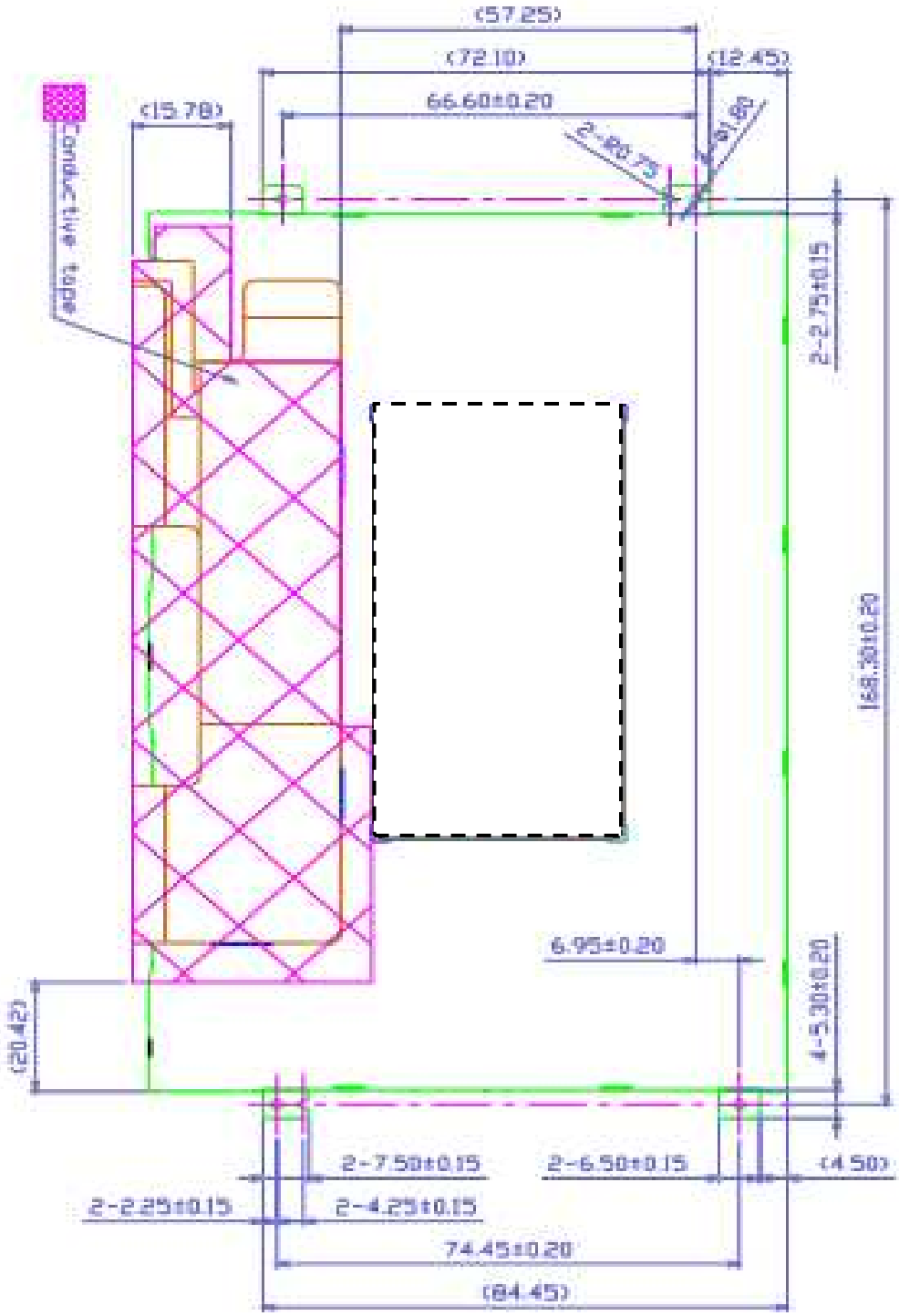

Notes :

1. CN1 : JAE AA01B P030VA1
2. BL FPC soldering height : 0.5 (max.) from PCB
3. LCM bending allowance spec : 0.3
4. LCM burr spec : inner side 0.03 (max.)
5. Other spec : refer to spec sheet

13.0 RELIABLITY TEST

The Reliability test items and its conditions are shown in below.

<Table10, Reliability Test>

No	Test Item	Conditions
1	Temperature and Humidity test (Operation)	1. Ta = 40℃/90% 24hr 2. Ta = 40℃/30% 24hr 3. Ta = 0℃ 24hr
2	Temperature and Humidity Cycling (Storage)	Ta = 85℃/90%RH (2H) ,-20℃(2H),Waypoint(25℃25% RH turn off Humidity control) 12cycle. 144Hr
3	Thermal shock	Ta = -40 °C ↔ 85 °C (30min residence), 100 cycle
4	Low temperature storage test	Ta = -40 °C, 300 hrs
5	Low Temperature Test (Operation)	Ta = -20 °C, 300hrs
6	Biased Humidity/Heat Soak Test (Storage)	Ta = 85 °C /85%, 300hr
7	Altitude storage	20000 ft/-40 °C, 24hr
8	Hot Start Test	Ta = 85 °C 1hr, power on/off per 5m, 5 time
9	Cold Start Test	Ta = -40 °C 1hr, power on/off per 5m, 5 time
10	Mechanical shock	100 G, 6 ms, half sine wave(±X,±Y,±Z). Acceleration measured shock table.
11	Mechanical Random vibration	3.5 Grms, PSD =0.025g^2/Hz, 5-500 Hz 15 minutes in all axes (X, Y, Z)
12	4 Pt Bend Test	1. 7 kgf deflection. Scribed edge side up 2. 4 kgf deflection. Scribed edge side down
13	Ring on Ring Test	X kgf applied. Load rae:75mm/min
14	ESD	Screen: 150 pF, 330 Ohm, +/-15kV air, +/- 8 kV contact. FPC: 100 pFm100 Ohm, +/-200V 10 points, 20times/pt
15	Functional Test	Page flip script, 2 m flips

Notes :

1. Except form over the conditions of the polarizer specifications.
2. ESD test condition is standard of customer system.

14.0 HANDLING & CAUTIONS

14.1 Cautions when taking out the module

- Pick the pouch only, when taking out module from a shipping package.

14.2 Cautions for handling the module

- As the electrostatic discharges may break the LCD module, handle the LCD module with care. Peel a protection sheet off from the LCD panel surface as slowly as possible.
- As the LCD panel and back - light element are made from fragile glass (epoxy) material, impulse and pressure to the LCD module should be avoided.
- As the surface of the polarizer is very soft and easily scratched, use a soft dry cloth without chemicals for cleaning.
- Do not pull the interface connector in or out while the LCD module is operating.
- Put the module display side down on a flat horizontal plane.
- Handle connectors and cables with care.

14.3 Cautions for the operation

- When the module is operating, do not lose MCLK, DE signals. If any one of these signals were lost, the LCD panel would be damaged.
- Obey the supply voltage sequence. If wrong sequence is applied, the module would be damaged.

14.4 Cautions for the atmosphere

- Dew drop atmosphere should be avoided.
- Do not store and/or operate the LCD module in a high temperature and/or humidity atmosphere. Storage in an electro-conductive polymer packing pouch and under relatively low temperature atmosphere is recommended.

14.5 Cautions for the module characteristics

- Do not apply fixed pattern data signal to the LCD module at product aging.
- Applying fixed pattern for a long time may cause image sticking.

14.6 Cautions for the digitizer assembly

- When assembling FPC connector, do not flip connector past 90°due to possible damage to connector.
- When positioning digitizer underneath driver IC, do not lift driver IC past 90°due to possible damage to drive IC pattern.
- Please be warned that during assembly of digitizer, the opening or closing of FPC will result in possible electrostatic discharge damage to the LED

14.7 Other cautions

- Do not re-adjust variable resistor or switch etc.
- When returning the module for repair or etc., Please pack the module not to be broken. We recommend to use the original shipping packages.